Hydraulikschema Variante 1

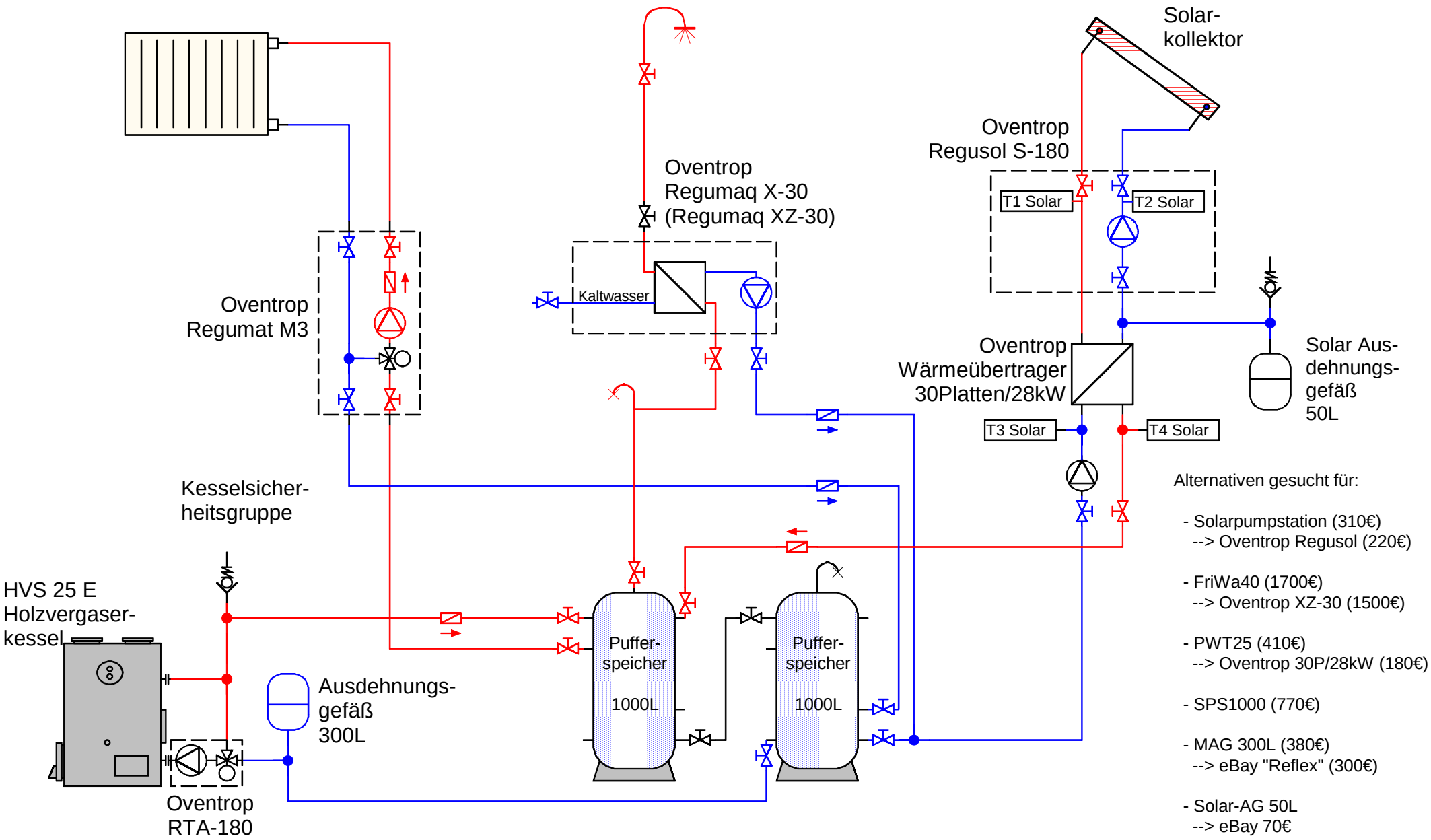

Alternativen gesucht für:

- Solarpumpstation (310€)
  --> Oventrop Regusol (220€)
- FriWa40 (1700€)
  --> Oventrop XZ-30 (1500€)
- PWT25 (410€)
  --> Oventrop 30P/28kW (180€)
- SPS1000 (770€)
- MAG 300L (380€)
  --> eBay "Reflex" (300€)
- Solar-AG 50L
  --> eBay 70€